Cutout dimension see sheet 2, forces see sheet 3

*To be adapted on site
**Customized panel

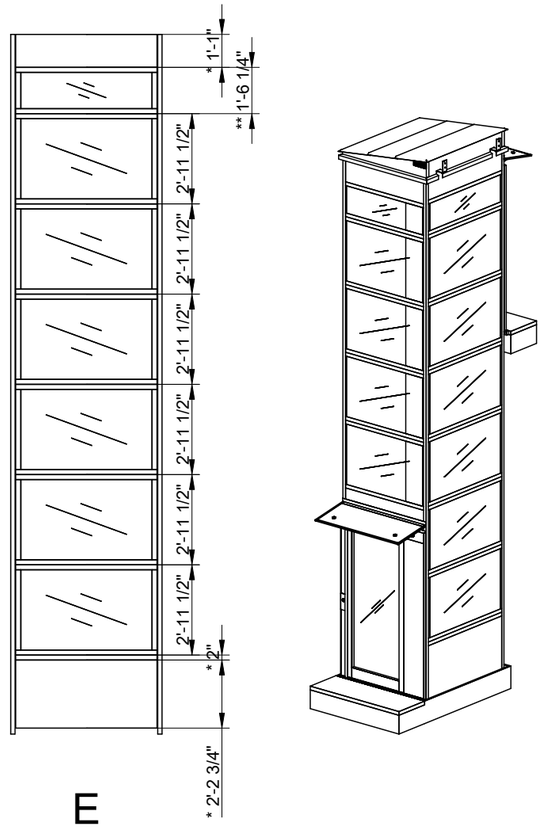

E

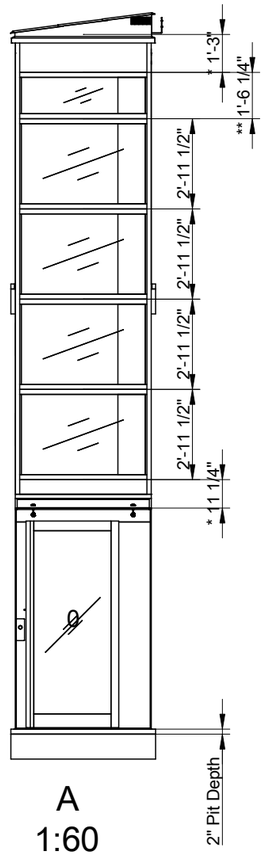

A
1:60

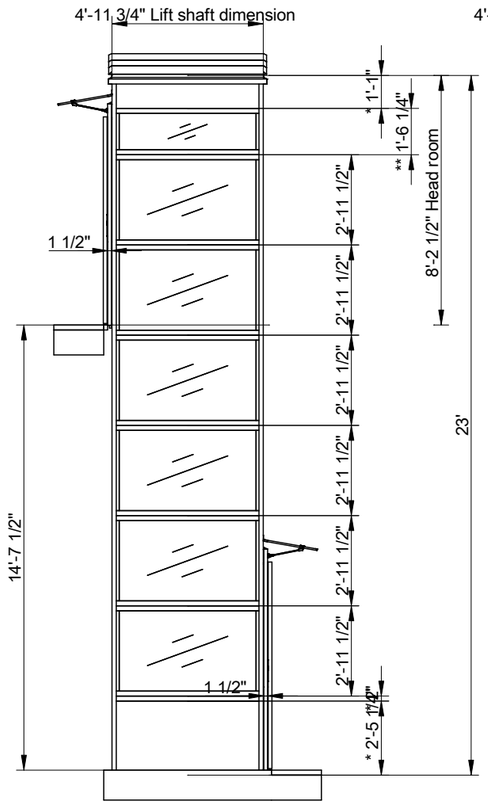

B
1:60

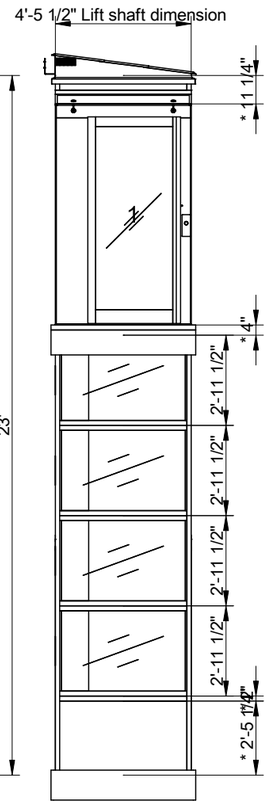

C
1:60

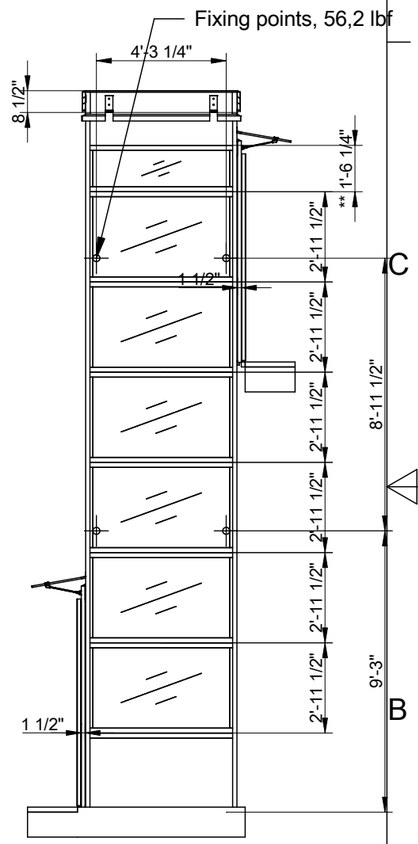

D
1:60

Positioning of machinery:

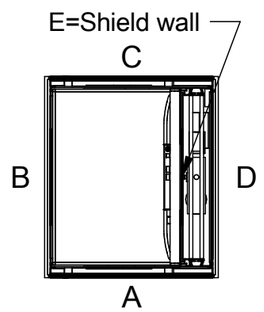

Options
Freq. 1x230/240V 50-60Hz 16A Soft
Capacity: 882 lb

Approved by builder:

European view placement:

Cibes

EOS ID	
Tender no	
Order no	
Gen. Tolerances	SS-ISO 27681-1 m

Principal drawing
Outdoor - 39" * 58"
Shaft drawing

Date	sheet	Scale:
		A3, 1:60

Shaft cutout sizes

Lift unit installed within a shaft by others

Door front cutout sizes		
Landing	Width	Height
A 0	55"	88 1/2"
C 1	55"	88 1/2"

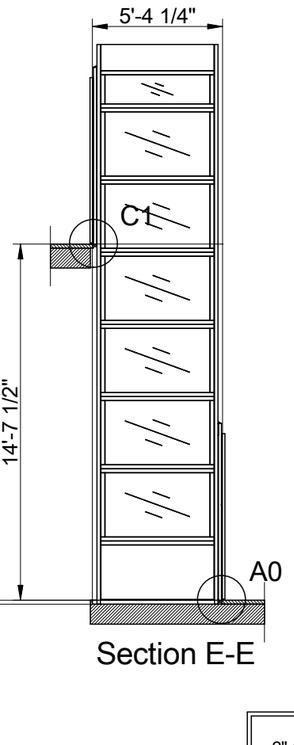

Section E-E

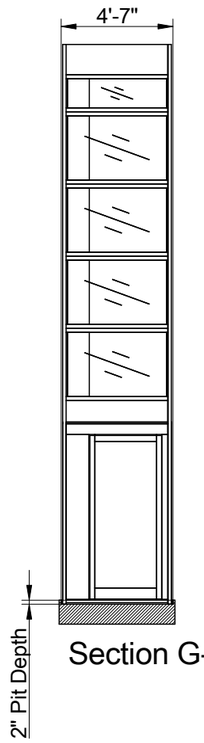

Section G-G

2" pit depth + 1/2", - 0". Bottom surface must be flat,

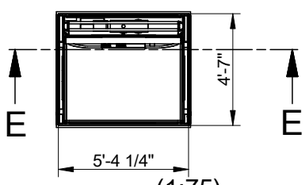

(1:75)

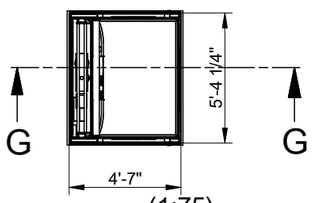

(1:75)

C1 (1:5)

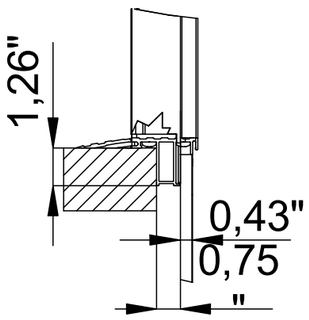

A0 (1:5)

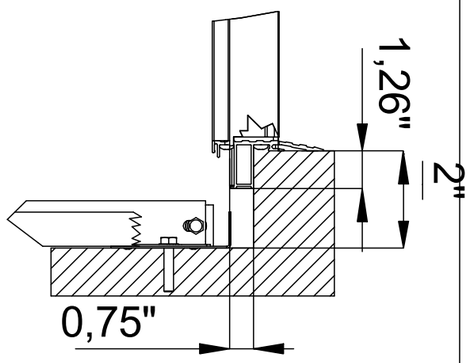

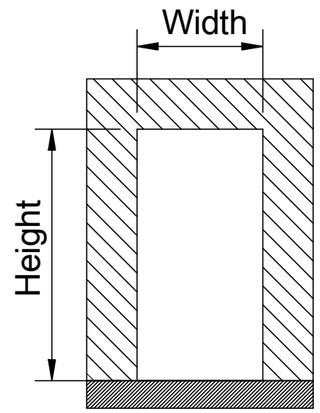

Door cut out

Incoming power supply is connected at landing:

For wiring and power supply, refer to the unit´s wiring diagrams.
Ceiling shaft lighting, is independent from the power cable and pulled back into the trench´s upper part. Shaft lighting > 50 lux.

NOTE! An effective emergency telephone is required for approved inspection.
The purchaser is responsible for an active phone line being present prior to the lift installation.

The incoming telephone line is connected to CiLow (TELE). Refer to wiring diagram.

The emergency signal device is powered by the lift's own battery in the event of a power failure.

The lift must be equipped with a two-way communication, either via the standard telephone or via the lift telephone, which automatically calls the alarm control center or the like.

NOTE! A lift featuring a frequency converter cannot be directly connected to a RCD.

NOTE! The platform lift shall be connected to a dedicated power supply conforming with EN 60204-1:2018, terminating at a main switch and fuse or overload with a means to lock it in the 'off' position or disconnected state

Approved by builder:

European view placement:

Cibes

EOS ID	Principal drawing Outdoor - 39" * 58" Cut out sizes		
Tender no			
Order no			
Gen. Tolerances SS-ISO 27681-1 m	Date	sheet	Scale: A3, 1:60

Loads sustained by shaft and plattform and fixing points bottom frame

L section force:
2405,46 lbf
L section load: 5,09 PSI
Weight on L-section area: 2358,95 lb

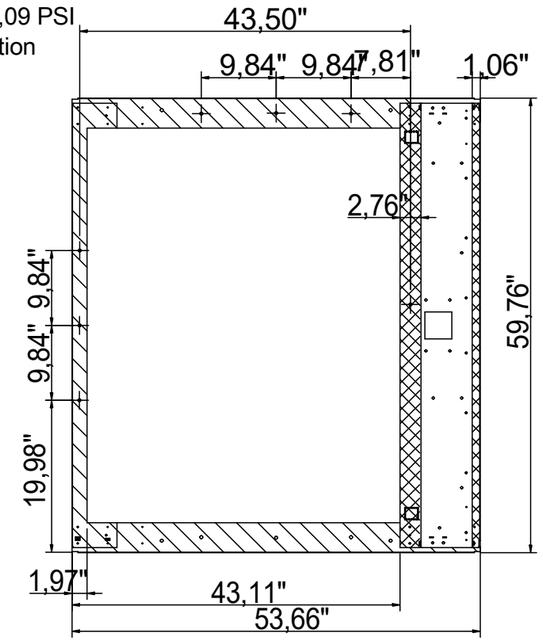

Scale: 1:20

Total weight of the lift equipment (including rated load): 4080,76 lb

Recommended positioning of fixing points.
Loads per fixing point, F=56,2 lbf

Mast force: 1643,35 lbf
Mast load: 8,55 PSI
Weight on mast area: 1611,58 lb

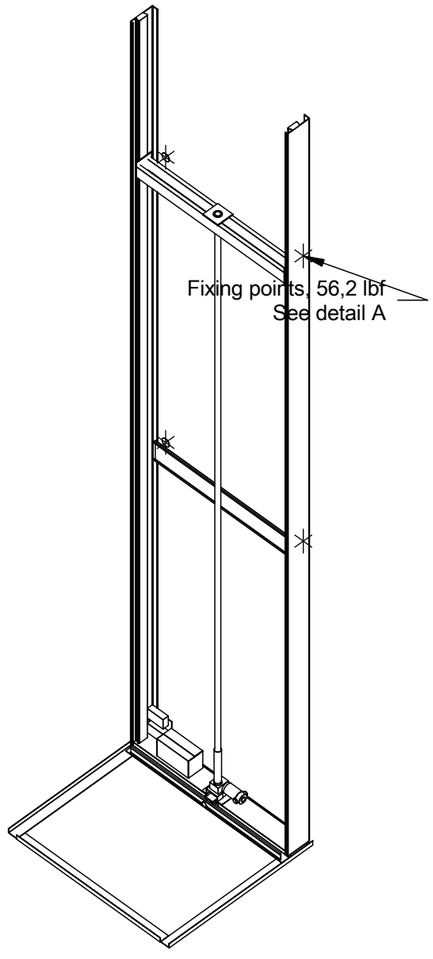

A (1 : 5)

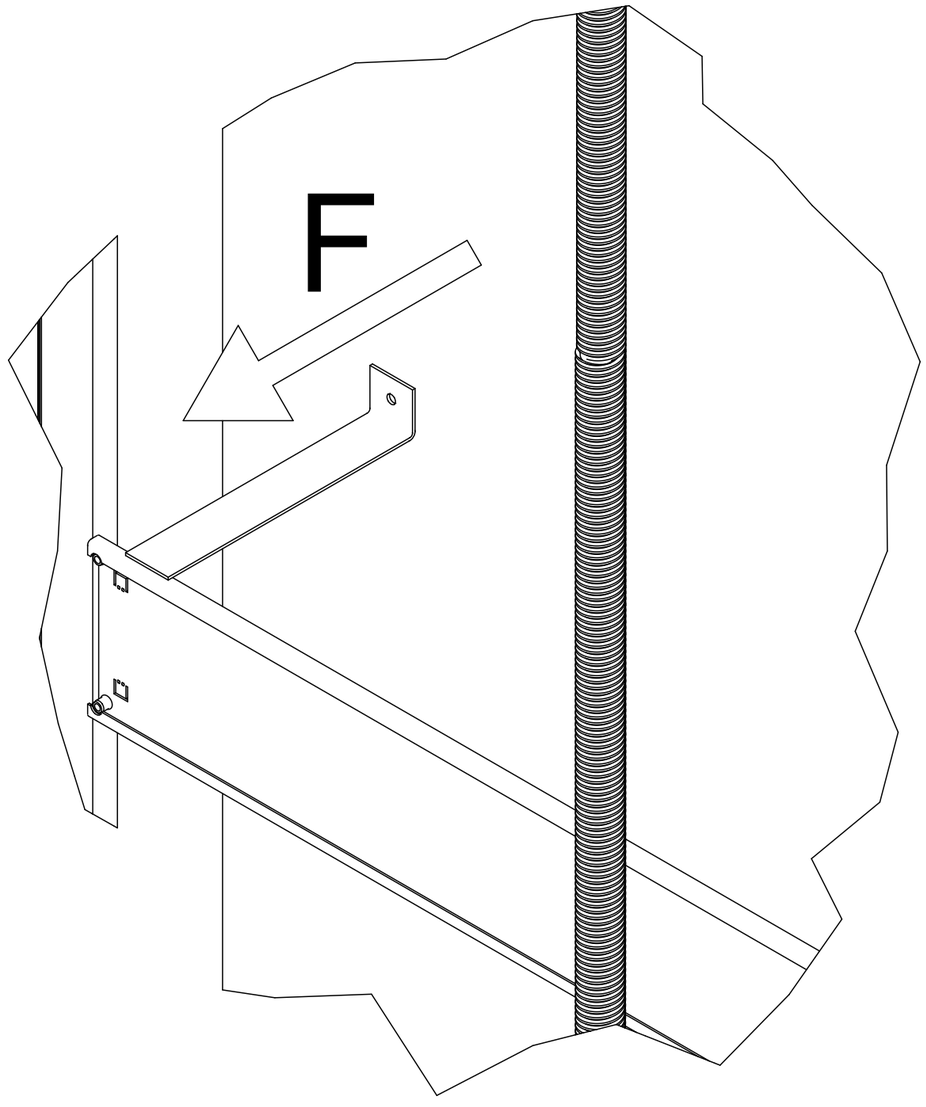

Approved by builder: _____	Cibes	EOS ID	Principal drawing Outdoor - 39" * 58" Loads and forces
		Tender no	
		Order no	
European view placement:		Gen. Tolerances SS-ISO 27681-1 m	Date / sheet / Scale: A3, 1:60

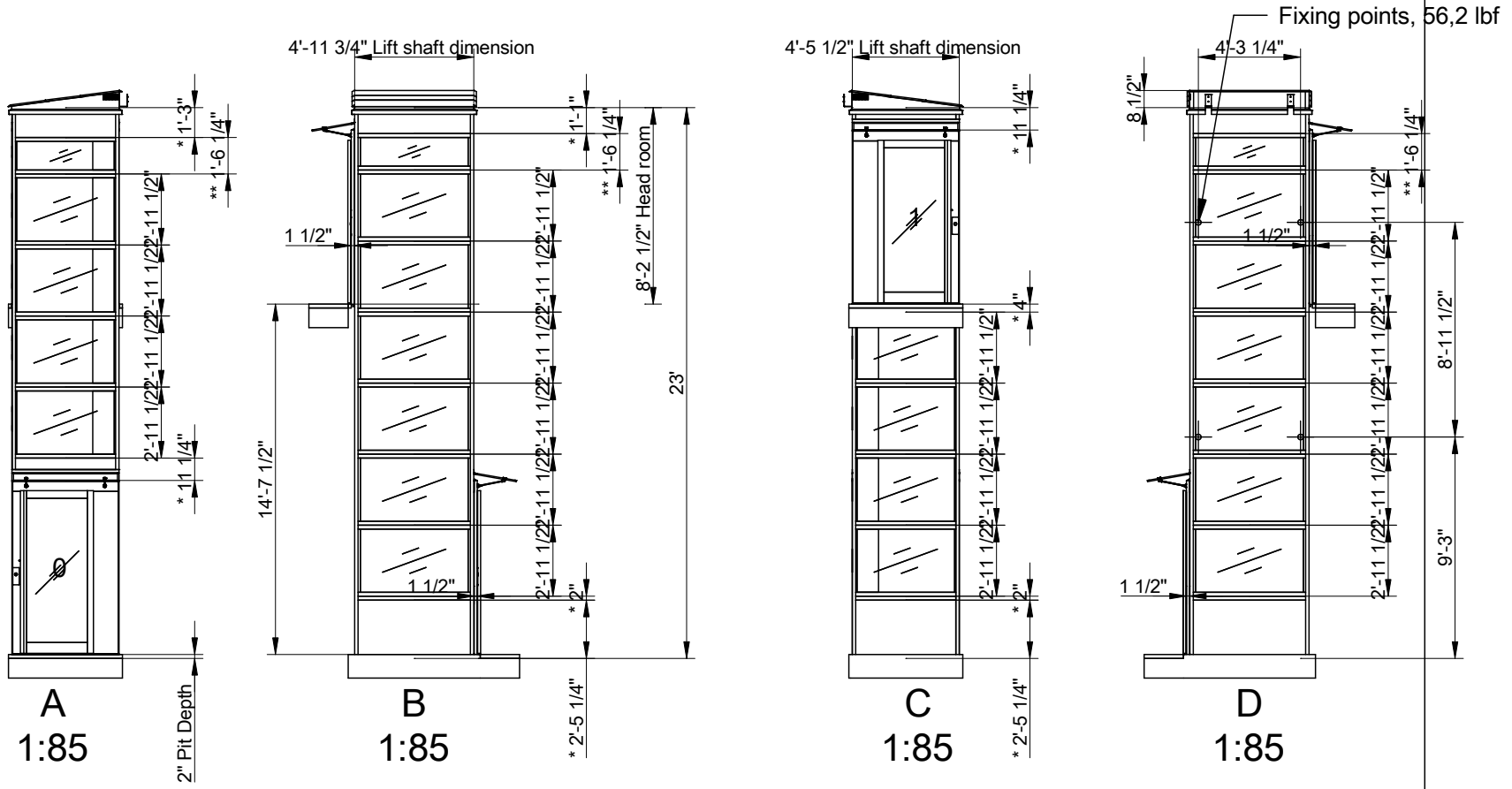

Positioning of machinery:

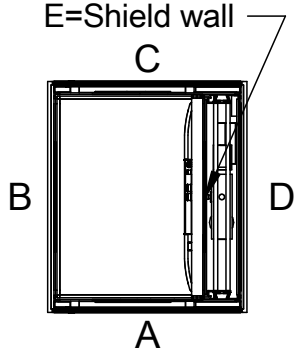

Approved by builder: _____	Cibes	EOS ID	Principal drawing Outdoor - 39" * 58" Shaft drawing
		Tender no	
		Order no	
European view placement:		Gen. Tolerances SS-ISO 27681-1 m	Date / sheet / Scale: A4,